Vinyl wall covering installation manual **SPC 60X120**

DUNE CLICK&FLOOR

INFORMATION

TONGUE&GROOVE

Tools required:

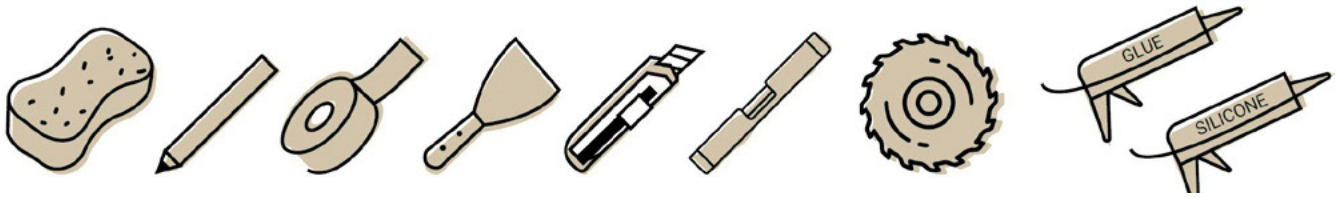

GENERAL PREPARATION

1. Inspection and acceptance of material
Before installing the product, it is essential to inspect the planks in full daylight to detect any defects, differences in shade, gloss or irregularities on the edges. Once the material has been installed, no claims for aesthetic or surface defects will be accepted.

2. Substrate inspection
Make sure that the condition of the subfloor meets the technical requirements specified in this manual. If you detect any anomaly, stop the installation and contact your usual distributor immediately.

3. Handling, transport and storage
Incorrect handling before installation can damage the product. Transport and store the planks with great care to prevent damage, always keeping them flat (never on edge or upright).

4. Safety and ergonomics when lifting
As these are heavy, bulky pieces, always use correct lifting techniques and handling aids (such as platforms or transport trolleys) whenever possible. Do not lift more weight than you can safely handle and ask for assistance if needed.

5. Waste allowance (Material calculation)
Measure the total area of the room before starting work and purchase an additional 5% to 10% of material to cover cuts and normal installation waste.

6. Acclimatisation of the material
In most cases, this product does not need to be acclimatised. However, if the flooring boxes were exposed for more than 2 hours to extreme temperatures below 10°C or above 32°C within the 12 hours before installation, acclimatisation is required. In this case, keep the planks at room temperature for at least 12 hours in an unopened package before starting the installation. Room temperature must be kept constantly between 20-25°C before and during installation.

7. Temperature control and room conditioning
Installation must only be carried out in climate-controlled rooms, with a constant temperature of 20- 25°C / 70-80°F both before and during installation. Portable stoves or heaters are not recommended, as they cannot stabilise the subfloor temperature; kerosene heaters are strictly prohibited.

SPC INSTALLATION

1

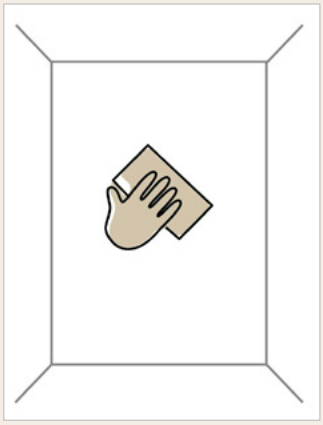

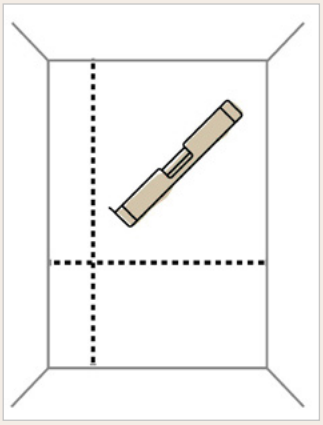

Prepare the wall: level, clean and degrease it.
Measure the height and length of the wall to lay out and cut the panels so that they fit the wall dimensions.

2

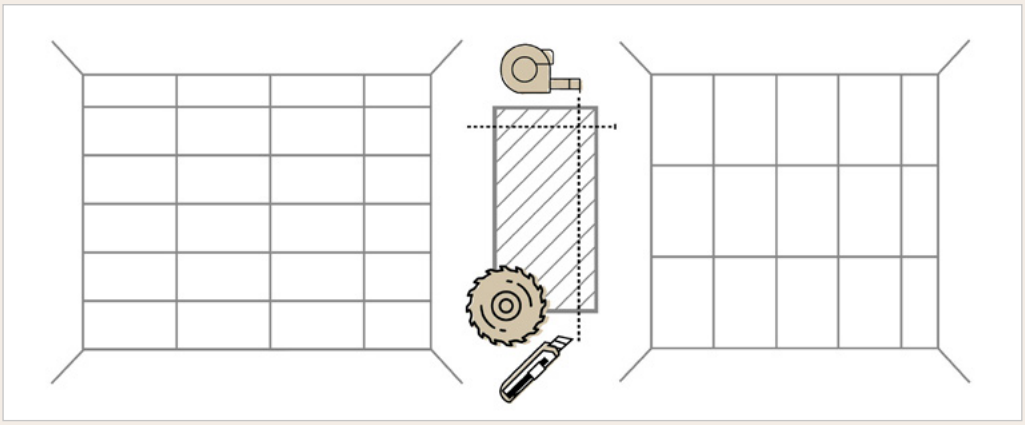

Cut the panels of the top and side rows to fit the wall dimensions. The panels can be cut with a utility knife. Use a straightedge or guide to ensure accurate cuts.

3

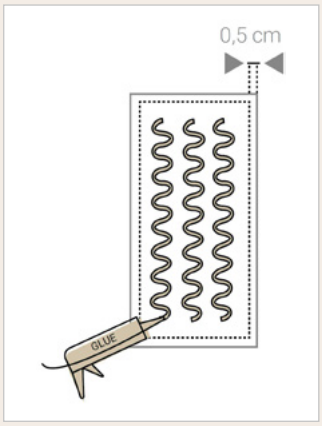

Apply adhesive to the back of a panel. We recommend the adhesive **MAPEFLEX MS 45(MAPEI)**; the application instructions specified by the manufacturer must be strictly followed.

Remember to leave a margin of about 0,5 cm from each edge. This prevents adhesive from squeezing out of the panel.

4

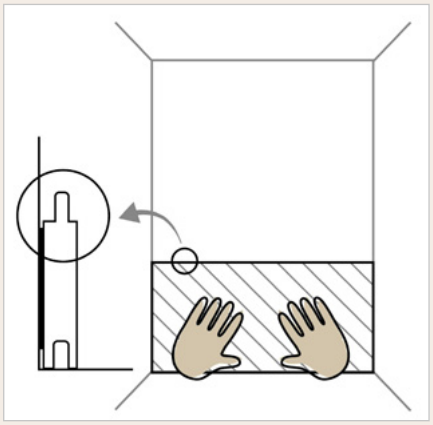

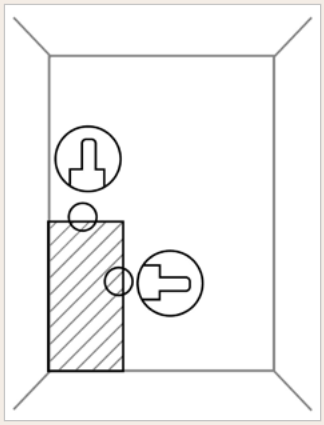

Stick the panel to the wall (groove facing down). Adjust the panel and press it in place.
If you choose vertical installation, make sure the tongue faces upwards and away from the side. This allows the panels to be joined.

SPC INSTALLATION

5

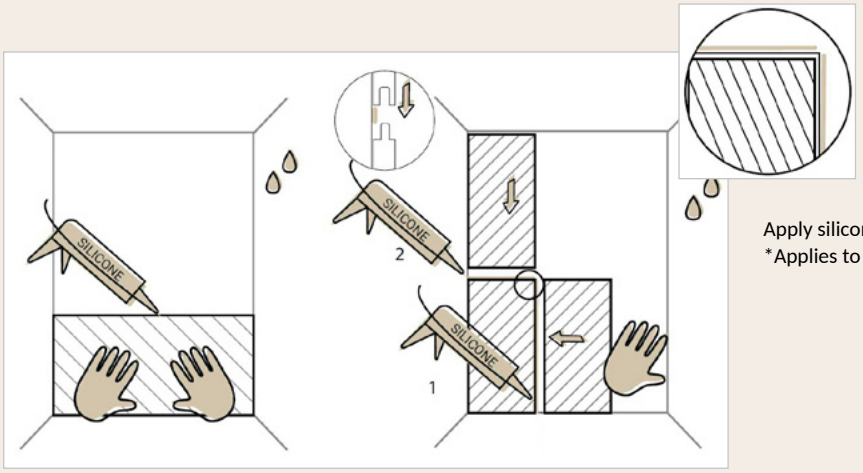

Apply silicone to the wall a few millimetres above the panel joint.
*Applies to installation in areas with higher humidity.

6

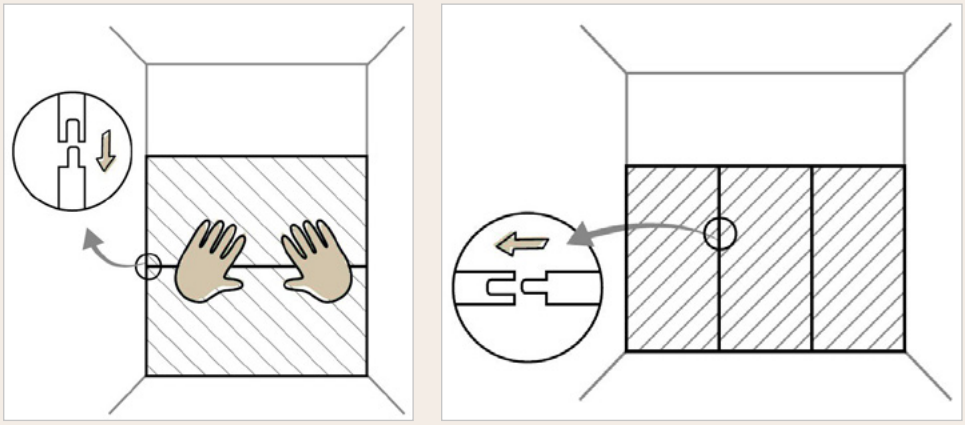

Connect the panel to the next one in the same way.

7

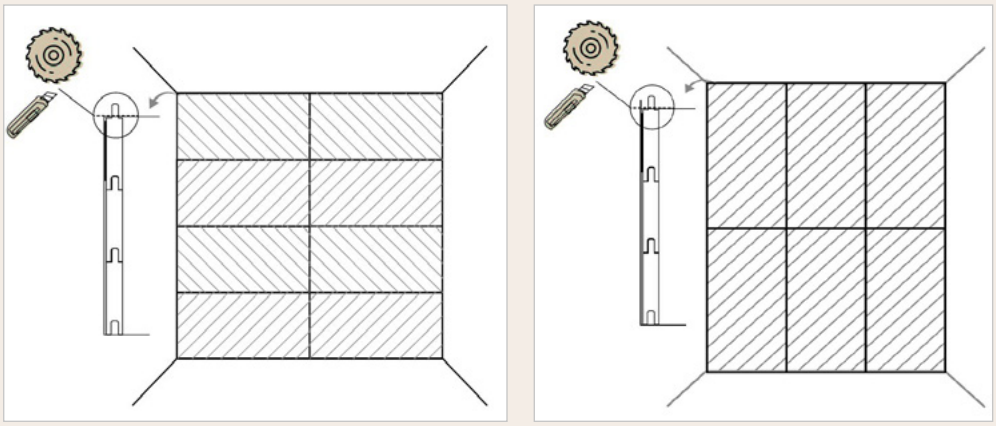

Finishing of the wall next to the ceiling.

8

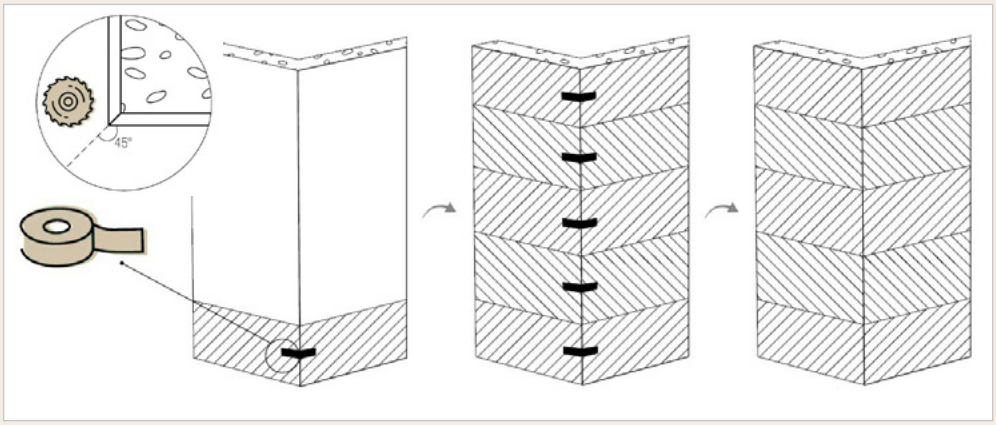

EXTERNAL CORNER: For 45° corners, we recommend the External Corner (p. 4) trim; alternatively, with the right skill, a 45° cut can be made and joined with tape.

We recommend the adhesive **MAPEFLEX MS 45(MAPEI)**

SPC INSTALLATION

REMINDER:

Drying time: After installing the panels, allow both the adhesive and the sealant to dry for approximately 72 hours before using the shower. Refer to the adhesive/sealant manufacturer's instructions for more information. Following these instructions will ensure that the wall surface is properly prepared for panel installation and that the panels stay firmly in place without problems.

Transition points and curved walls: Right-angled corners: Use internal and external corner trims for a professional result. Install following the diagrams below. Curved walls: Place the panel face down. Use a straight router bit to cut flexible grooves in the back. Keep a spacing of 6 to 8 mm between grooves. The tighter the curve, the closer together the grooves must be. Bend the panel carefully to follow the curvature of the wall.

Profiles:



External corner trim
4,5x2700 mm
(aluminium)



Internal corner trim
10x2700 mm (aluminium)



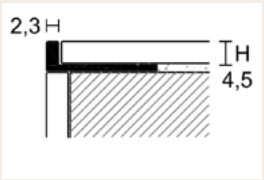

External corner trim

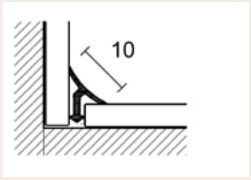

Internal corner trim

We recommend the adhesive **MAPEFLEX MS 45(MAPEI)**

USE AND MAINTENANCE

- Initial maintenance: Use a pH-neutral cleaner to clean the surface of the wall panels after installation.
- Daily/weekly cleaning: Gently remove dust with a soft, dry cloth. For regular cleaning, use a cloth dampened with a pH-neutral cleaning solution. Do not use abrasive cleaning products.
- Spills: Wipe up any spills immediately with a clean cloth or paper towel to prevent possible staining.
- Sunlight: Avoid direct and prolonged exposure to strong sunlight; use curtains or blinds to prevent fading.

- Impacts: Take protective measures to prevent damage caused by sharp or heavy objects.
- General: Regular cleaning and maintenance is recommended to keep the panels in good condition for years.

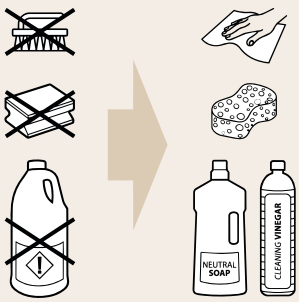

INTELLECTUAL PROPERTY

The content, design, texts and images in this catalogue are protected by current Intellectual Property legislation (Royal Legislative Decree 1/1996).

The total or partial reproduction, distribution or transformation of this document without the prior written authorisation of the company is strictly prohibited. Any unauthorised use may be penalised in accordance with the Criminal Code.

The company reserves the right to alter, update or discontinue the models, formats, finishes or technical specifications shown in this catalogue without prior notice, due to production needs or continuous improvement, without this giving rise to any right to claim or compensation.

All dimensions indicated are standard and may be subject to slight mechanical or manufacturing variations inherent to the production process.

The photographs and decorative compositions shown in this catalogue are for guidance and advertising purposes only.

Due to the characteristics of the materials and printing processes, the colours, textures and shades of printed products may differ slightly from the actual pieces.

It is the buyer's responsibility to check, prior to installation, that the material received fully matches the model, quality, shade and calibre ordered. For the actual installation work, the current technical installation instructions issued and published by the manufacturer must be strictly followed.