Vinyl flooring installation manual **SPC**

DUNE CLICK&FLOOR

INFORMATION

UNICLIC® PATENTED TECHNOLOGY

Tools required:

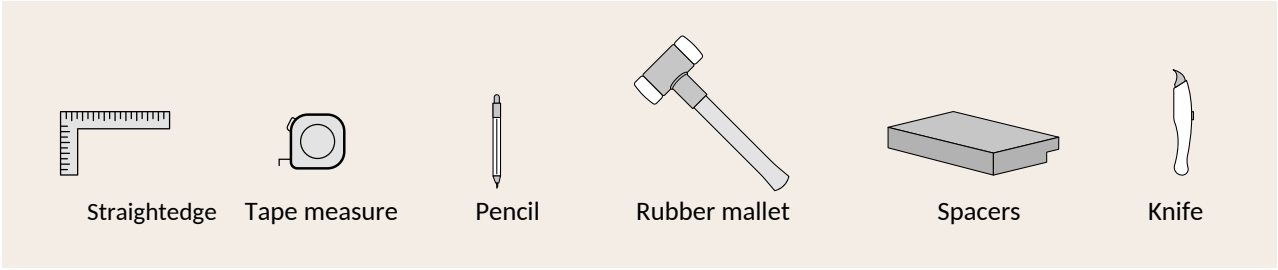

GENERAL PREPARATION

1. Inspection and acceptance of material

Before installing the product, it is essential to inspect the planks in full daylight to detect any defects, differences in shade, gloss or irregularities on the edges. Once the material has been installed, no claims for aesthetic or surface defects will be accepted.

2. Laying direction and mixing of batches

We recommend laying the planks perpendicular to the window, aligned with the main source of natural light. For an optimal, balanced visual finish, mix and install material from 3 to 4 boxes at the same time.

3. Subfloor inspection

Make sure that the condition of the subfloor meets the technical requirements specified in this manual. If you detect any anomaly, stop the installation and contact your usual distributor immediately.

4. Handling, transport and storage

Incorrect handling before installation can damage the product. Transport and store the planks with great care to prevent damage, always keeping them flat (never on edge or upright).

5. Safety and ergonomics when lifting

As these are heavy, bulky pieces, always use correct lifting techniques and handling aids (such as platforms or transport trolleys) whenever possible. Do not lift more weight than you can safely handle and ask for assistance if needed.

6. Waste allowance (Material calculation)

Measure the total area of the room before starting work and purchase an additional 5% to 10% of material to cover cuts and normal installation waste.

8. Acclimatisation of the material

This flooring normally does not require acclimatisation. However, if the boxes have been exposed to extreme temperatures (below 10ºC or above 40ºC) for more than two hours within the 12 hours before installation, acclimatisation is mandatory. In this case, keep the material in its closed boxes in the room where it will be installed for at least 12 hours. During this time and throughout the entire installation, maintain a stable room temperature of 20-25ºC / 70-80ºF.

9. Temperature control and room conditioning

Installation must only be carried out in climate-controlled rooms, with a constant temperature of 20-25ºC / 70-80ºF both before and during installation. Portable stoves or heaters are not recommended, as they cannot stabilise the subfloor temperature; kerosene heaters are strictly prohibited.

10. Temperature ranges after installation

After installation, make sure the floor is not exposed to temperatures below 10 ºC / 50ºF or above 50ºC / 120ºF.

11. Expansion joints for large areas

In rooms or projects exceeding 400 m2 / 4356 ft2 and/or lengths over 20 m / 66 ft, use expansion mouldings.

SUBFLOOR INFORMATION

12. Subfloor requirements and preparation

This flooring can be installed over most existing rigid floor coverings, provided the base is clean, dry, firm, structurally sound and level to within 5 mm / 3/16¨ over 3 metres / 10 ft.

13. Slope tolerance

The subfloor must not have a slope or incline greater than 25 mm / 1¨ per 2 m / 6 ft in any direction.

14. Correcting irregularities

Any crack, depression, dip, open expansion joint or other subfloor imperfection must be filled and smoothed with a suitable levelling compound.

15. Cleaning and condition of the base

The substrate must be completely free of high residual moisture and alkalinity. Clean the surface thoroughly, removing all dirt, paint, varnish, wax, grease, solvents or any other contaminants.

16. Incompatible preparation products

Do not use cleaners or products containing petroleum, solvents or citrus extracts, as they may cause permanent staining or swelling of the planks.

17. Subfloor moisture control

Although this floor is waterproof, it is not designed to be used as a moisture barrier. Moisture vapour emissions from concrete must not exceed 3.63 Kg / 8 lb (ASTM F1869) / 90% RH (ASTM F2170), with a pH limit of 9 / max. 2.5% moisture content (CM method).

18. Excluded areas and existing floor coverings

This material is not suitable for outdoor use or for areas prone to standing water or extreme steam (such as saunas). If installed over existing sheet vinyl floors, these must not have cushioned backing or consist of more than one layer. An overly flexible subfloor will drastically reduce the natural strength of the product.

WOODEN SUBFLOORS

• **Fixing and prior repair:** If installing over an existing wooden floor, fix any loose or creaking boards before starting.

• **Noise prevention:** Nail or screw every 15 cm / 6¨ along the joints to prevent squeaking.

• **Insulation of crawl spaces and floor slabs:** Crawl spaces or spaces below must be kept dry. A polyethylene sheet of at least 0,15 mm (6 mil) must be laid, fully covering the earth floor.

• **Plank orientation:** We recommend laying the new floor perpendicular to the boards of the existing floor.

• **Other wood-based panels:** Plywood, OSB, chipboard or MDF subfloors must be structurally sound and strictly comply with the respective manufacturer's instructions.

CONCRETE SUBFLOORS

• **Curing and condition of the base:** The screed must have cured for at least 60 days. It must be smooth, completely dry, clean and free of foreign particles, wax, grease, oil, paint, solvents or old adhesive residues. Avoid release agents or hardeners that may interfere with the performance of the product.

• **Vapour barrier:** We strongly recommend installing a polyethylene sheet or film of at least 0,15 mm / 6 mil between the concrete base and the flooring to protect the system against rising damp.

DO NOT INSTALL OVER:

• **Carpets or carpeting of any kind.**
• **Old vinyl with cushioned or foam backing.**
• **Existing floating floors of any kind, self-adhesive/loose lay surfaces or vinyl floors fixed only around the perimeter.**

• **Solid or engineered wood parquet or floorboards installed directly on concrete, or battens in direct contact with the screed.**

IMPORTANT NOTICE

• **Underfloor heating:** The floor can be installed over a 12 mm / 1/2¨ embedded heating system using the floating installation method. The maximum operating temperature must never exceed 30°C / 85°F. To prevent overheating, we recommend using a temperature sensor built into the floor.

· Turn off the heating 24 hours before, during and 24 hours after installation when installing over underfloor heating systems.

· Before installing over newly built radiant heating systems, run the system at full capacity to drive out residual moisture from its cement screed.

· Make sure the room temperature is kept constant between 20-25°C / 70-80°F before and during installation.

· The floor temperature must not exceed 30°C / 85°F.

· Once installation is complete, the heating system should be switched on and increased gradually (5-degree increments) until it returns to normal operating conditions.

· Consult the heating system manufacturer's recommendations for further guidance.

Warranty warning: Electric blankets or mats that are not embedded in the subfloor are not recommended. The use of non-embedded electric systems will void the floor warranty in the event of failure or damage. For a safe installation, this product must only be laid over heating systems embedded in the subfloor that comply with the guidelines above.

SPC INSTALLATION

Remove skirting, mouldings, wall base, appliances and furniture from the room. For best results, door casings should be undercut so that the floor can move freely without being pressed. After the preparation work, sweep and vacuum the work area to remove all dust and debris.

With a floating floor, always make sure to leave a 6 mm / 1/4¨ gap between the walls and fixed points such as pipes, pillars, stairs, etc. These gaps will be covered with trim mouldings after the floor has been installed.

Whenever possible, plan the layout so that the plank joints do not fall over the joints or seams of the existing substrate. Plank end joints must be staggered at least 20 cm / 8¨ apart. Do not install over expansion joints. Avoid installing pieces shorter than 30 cm / 12¨ at the start or end of rows.

Do not install your kitchen cabinets directly on your floor. The quality of this floor can only be guaranteed as long as the floor can move freely.

Decide on the installation direction. We recommend installing the length of the planks perpendicular to the window, following the direction of the main light.

Measure the area to be installed: the plank width in the last row must not be less than 50 mm / 2¨. If it is, adjust the width of the first row to be installed. In narrow corridors, we recommend installing the floor parallel to the length of the corridor.

UNDERLAYMENT: This flooring already includes a pre-attached underlayment. Do NOT use any additional underlayment or insulation, as it could damage the click locking system and will automatically void the product warranty.

1

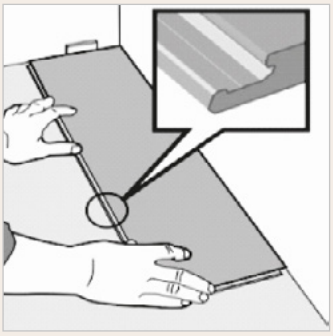

Start the installation from the corner of the wall, with the tongue (protruding locking edge) facing the wall, using spacers to keep a distance of 8-10mm between the floor and the wall.

2

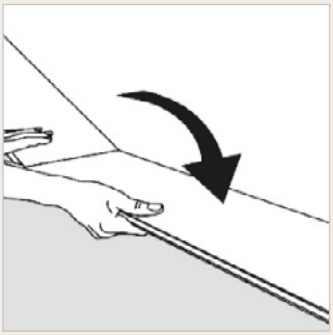

For the second piece of the first row, first angle in the short side and lock it. Then gently tap the end of the short side with your hand or a rubber mallet until it is firmly locked with the previous piece and both are level. Make sure the two pieces are fully aligned. Continue installing the first row until you reach the right-hand wall.

IMPORTANT NOTICE: If you notice that the planks are not at the same height or not properly locked together, please follow the disassembly instructions at the end of the page; take them apart and check for any debris blocking the groove. Poor alignment of the end joint or forcing the mechanism when the planks are not properly engaged can result in permanent damage to the end joint.

SPC INSTALLATION

3

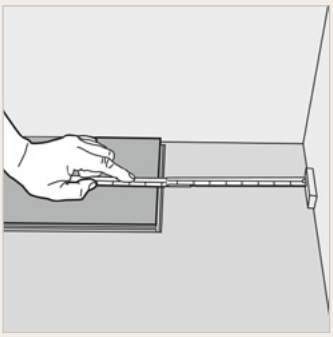

At the end of the first row, leave an expansion gap of 8 to 10mm to the wall and measure the length needed for the last piece to cut it.

4

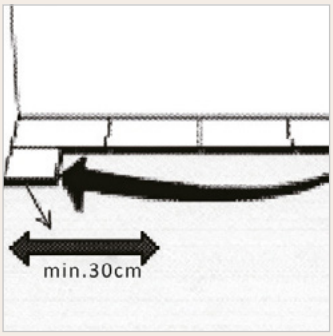

Start the second row with the leftover cut piece from the last piece of the previous row. Otherwise, cut a new piece in half and use it to start the second row. Whenever possible, use the cut piece from the previous row to start the next row.

5

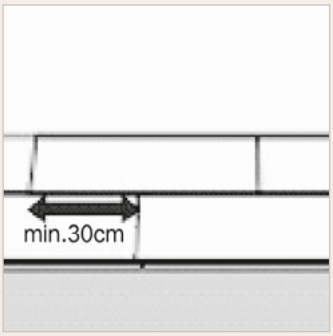

The short-side joints of all pieces must be offset by at least 30cm (12 inches).

6

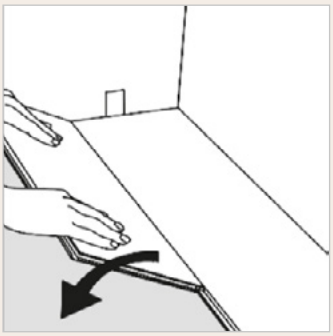

Hold the piece of the second row at an angle and insert it into the locking groove on the long side of the previous row. Then press it down and push it forward to ensure a firm joint.

7



First lock the short side, making sure it joins tightly with the short end of the piece on the left.

SPC INSTALLATION

8

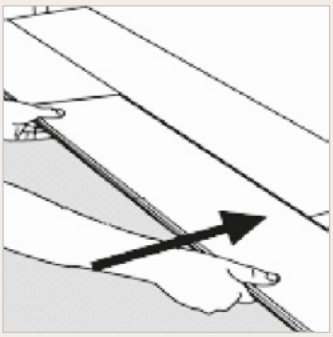

Then lock the long side of the piece. Push it forward to ensure both pieces are firmly joined.

9

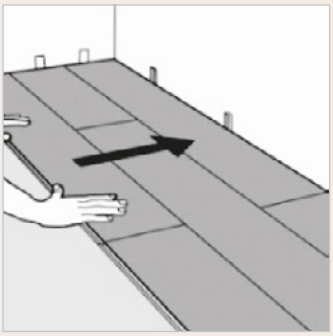

After installing the first 2-3 rows, adjust the distance to the front wall by placing spacers. Keep the spacers in place throughout the installation and remove them when finished.

10

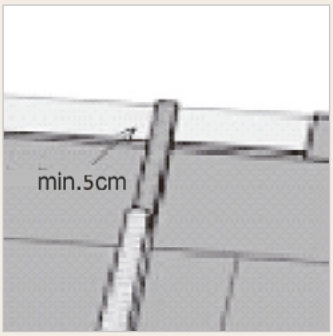

The last row of pieces must be at least half the width of a piece and keep an expansion gap to the wall.

11



When installing around radiators or heating pipes, drill a hole twice the diameter of the pipe. Cut off part of the piece with a utility knife, place the piece on one side of the pipe and then fit the cut part on the other side.

12



Where the pieces cannot be angled in, use a chisel to remove the vertical part of the locking tongue, apply a suitable amount of adhesive to the tongue and then push it horizontally until it locks. Finally, place some spacers between the last piece and the wall.

INSTALLATION IN BATHROOMS (10mm GAP)

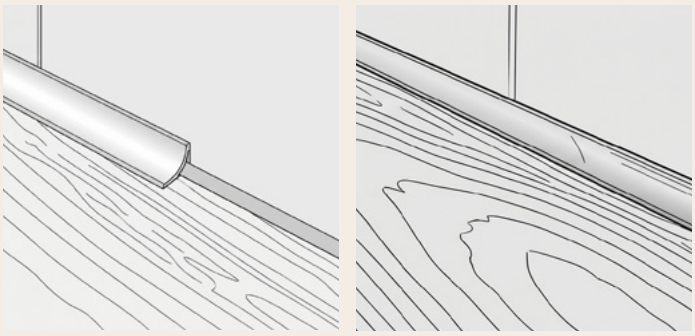

Leave a 10mm. expansion gap, fill with silicone and cover with a scotia moulding.

FINISHING THE INSTALLATION

Refit the skirting board or wall base, leaving a small clearance between the skirting and the planks. Nail the moulding to the wall surface, not through the floor. At doorways and other areas where the planks meet other surfaces, it is preferable to use a “T” profile or similar to cover the exposed edge, without pressing on the planks. Leave a small gap between the planks and the adjacent surface.

DISASSEMBLY

Separate the entire row by gently lifting it at an angle. To separate the planks, lay them on the floor and pull them apart. If the planks do not separate easily, you can lift them slightly to about 5 degrees while separating them.

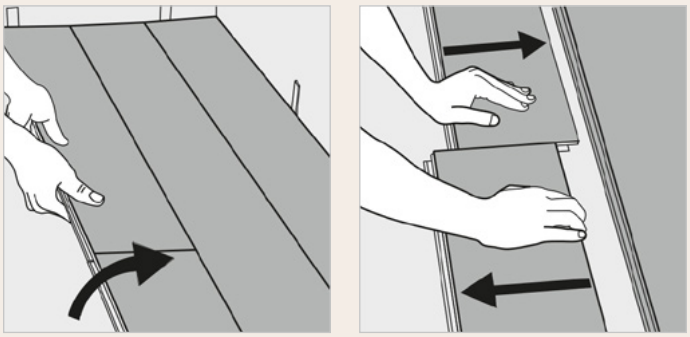

USE AND MAINTENANCE

- Sweep or vacuum daily, using soft-bristle attachments.
- Wipe up spills and excess liquid immediately.
- Damp mop as needed and use detergents recommended for vinyl floors.
- Domestic steam mops may be used on this product. Use the lowest setting with a suitable soft pad, and do not hold the steam mop in one spot for a prolonged period (more than 5 minutes). Refer to the steam mop manufacturer's instructions for proper use.
- Use suitable floor protection such as felt pads under furniture.
- Place a mat at exterior entrances to reduce the amount of dirt brought into your home. Do not use mats with latex or rubber backing, as these backings can cause permanent discolouration.
- Do not use abrasive cleaners, bleach or wax to maintain the floor.
- Do not drag or slide heavy objects across the floor.

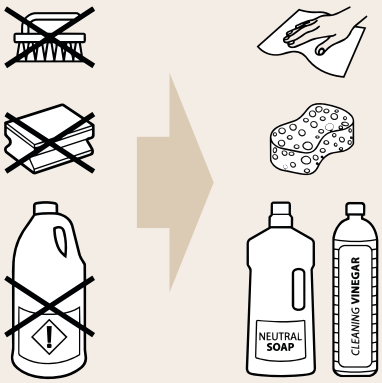

INTELLECTUAL PROPERTY

The content, design, texts and images in this catalogue are protected by current Intellectual Property legislation (Royal Legislative Decree 1/1996).

The total or partial reproduction, distribution or transformation of this document without the prior written authorisation of the company is strictly prohibited. Any unauthorised use may be penalised in accordance with the Criminal Code.

The company reserves the right to alter, update or discontinue the models, formats, finishes or technical specifications shown in this catalogue without prior notice, due to production needs or continuous improvement, without this giving rise to any right to claim or compensation.

All dimensions indicated are standard and may be subject to slight mechanical or manufacturing variations inherent to the production process.

The photographs and decorative compositions shown in this catalogue are for guidance and advertising purposes only.

Due to the characteristics of the materials and printing processes, the colours, textures and shades of printed products may differ slightly from the actual pieces.

It is the buyer's responsibility to check, prior to installation, that the material received fully matches the model, quality, shade and calibre ordered. For the actual installation work, the current technical installation instructions issued and published by the manufacturer must be strictly followed.