Vinyl flooring installation manual **SPC**

DUNE CLICK&FLOOR

INFORMATION

i4F DROP-LOCK TECHNOLOGIES

Tools required:

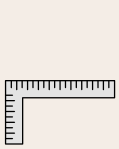
Straightedge


Tape measure

Pencil

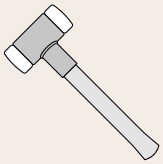
Rubber mallet

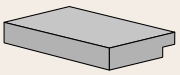
Spacers


Knife

GENERAL PREPARATION

1. Inspection and acceptance of material

Before installing the product, it is essential to inspect the planks in full daylight to detect any defects, differences in shade, gloss or irregularities on the edges. Once the material has been installed, no claims for aesthetic or surface defects will be accepted.

2. Laying direction and mixing of batches

We recommend laying the planks perpendicular to the window, aligned with the main source of natural light. For an optimal, balanced visual finish, mix and install material from 3 to 4 boxes at the same time.

3. Subfloor inspection

Make sure that the condition of the subfloor meets the technical requirements specified in this manual. If you detect any anomaly, stop the installation and contact your usual distributor immediately.

4. Handling, transport and storage

Incorrect handling before installation can damage the product. Transport and store the planks with great care to prevent damage, always keeping them flat (never on edge or upright).

5. Safety and ergonomics when lifting

As these are heavy, bulky pieces, always use correct lifting techniques and handling aids (such as platforms or transport trolleys) whenever possible. Do not lift more weight than you can safely handle and ask for assistance if needed.

6. Waste allowance (Material calculation)

Measure the total area of the room before starting work and purchase an additional 5% to 10% of material to cover cuts and normal installation waste.

8. Acclimatisation of the material

This flooring normally does not require acclimatisation. However, if the boxes have been exposed to extreme temperatures (below 10ºC or above 40ºC) for more than two hours within the 12 hours before installation, acclimatisation is mandatory. In this case, keep the material in its closed boxes in the room where it will be installed for at least 12 hours. During this time and throughout the entire installation, maintain a stable room temperature of 20-25ºC / 70-80ºF.

9. Temperature control and room conditioning

Installation must only be carried out in climate-controlled rooms, with a constant temperature of 20-25ºC / 70-80ºF both before and during installation. Portable stoves or heaters are not recommended, as they cannot stabilise the subfloor temperature; kerosene heaters are strictly prohibited.

10. Temperature ranges after installation

After installation, make sure the floor is not exposed to temperatures below 10 ºC / 50ºF or above 50ºC / 120ºF.

11. Expansion joints for large areas

In rooms or projects exceeding 400 m2 / 4356 ft2 and/or lengths over 20 m / 66 ft, use expansion mouldings.

SUBFLOOR INFORMATION

12. Subfloor requirements and preparation

This flooring can be installed over most existing rigid floor coverings, provided the base is clean, dry, firm, structurally sound and level to within 5 mm / 3/16¨ over 3 metres / 10 ft.

13. Slope tolerance

The subfloor must not have a slope or incline greater than 25 mm / 1¨ per 2 m / 6 ft in any direction.

14. Correcting irregularities

Any crack, depression, dip, open expansion joint or other subfloor imperfection must be filled and smoothed with a suitable levelling compound.

15. Cleaning and condition of the base

The substrate must be completely free of high residual moisture and alkalinity. Clean the surface thoroughly, removing all dirt, paint, varnish, wax, grease, solvents or any other contaminants.

16. Incompatible preparation products

Do not use cleaners or products containing petroleum, solvents or citrus extracts, as they may cause permanent staining or swelling of the planks.

17. Subfloor moisture control

Although this floor is waterproof, it is not designed to be used as a moisture barrier. Moisture vapour emissions from concrete must not exceed 3.63 Kg / 8 lb (ASTM F1869) / 90% RH (ASTM F2170), with a pH limit of 9 / max. 2.5% moisture content (CM method).

18. Excluded areas and existing floor coverings

This material is not suitable for outdoor use or for areas prone to standing water or extreme steam (such as saunas). If installed over existing sheet vinyl floors, these must not have cushioned backing or consist of more than one layer. An overly flexible subfloor will drastically reduce the natural strength of the product.

WOODEN SUBFLOORS

• **Fixing and prior repair:** If installing over an existing wooden floor, fix any loose or creaking boards before starting.

• **Noise prevention:** Nail or screw every 15 cm / 6¨ along the joints to prevent squeaking.

• **Insulation of crawl spaces and floor slabs:** Crawl spaces or spaces below must be kept dry. A polyethylene sheet of at least 0,15 mm (6 mil) must be laid, fully covering the earth floor.

• **Plank orientation:** We recommend laying the new floor perpendicular to the boards of the existing floor.

• **Other wood-based panels:** Plywood, OSB, chipboard or MDF subfloors must be structurally sound and strictly comply with the respective manufacturer's instructions.

CONCRETE SUBFLOORS

• **Curing and condition of the base:** The screed must have cured for at least 60 days. It must be smooth, completely dry, clean and free of foreign particles, wax, grease, oil, paint, solvents or old adhesive residues. Avoid release agents or hardeners that may interfere with the performance of the product.

• **Vapour barrier:** We strongly recommend installing a polyethylene sheet or film of at least 0,15 mm / 6 mil between the concrete base and the flooring to protect the system against rising damp.

DO NOT INSTALL OVER:

• **Carpets or carpeting of any kind.**
• **Old vinyl with cushioned or foam backing.**
• **Existing floating floors of any kind, self-adhesive/loose lay surfaces or vinyl floors fixed only around the perimeter.**

• **Solid or engineered wood parquet or floorboards installed directly on concrete, or battens in direct contact with the screed.**

IMPORTANT NOTICE

• **Underfloor heating:** The floor can be installed over a 12 mm / 1/2¨ embedded heating system using the floating installation method. The maximum operating temperature must never exceed 30°C / 85°F. To prevent overheating, we recommend using a temperature sensor built into the floor.

· Turn off the heating 24 hours before, during and 24 hours after installation when installing over underfloor heating systems.

· Before installing over newly built radiant heating systems, run the system at full capacity to drive out residual moisture from its cement screed.

· Make sure the room temperature is kept constant between 20-25°C / 70-80°F before and during installation.

· The floor temperature must not exceed 30°C / 85°F.

· Once installation is complete, the heating system should be switched on and increased gradually (5-degree increments) until it returns to normal operating conditions.

· Consult the heating system manufacturer's recommendations for further guidance.

Warning: Electric heating mats that are not embedded in the subfloor are not recommended under this floor. Using electric heating mats that are not embedded in the subfloor under this floor may void your floor warranty in the event of failure. It is best to install this floor over heating systems embedded in the subfloor and to follow the guidelines above.

SPC INSTALLATION

1. Room preparation. Clear the area: Remove skirting boards, baseboards, mouldings, appliances and furniture from the room. Undercut door frames: For a flawless finish and to allow the floor to expand freely, undercut door frames and casings. **Final cleaning:** After the preparatory work, sweep and vacuum the whole area thoroughly to leave the subfloor free of dust and debris.

2. Perimeter expansion gaps. As this is a floating installation, a 6 mm / 1/4¨ perimeter expansion gap must be left at walls, columns, pipes, stairs and any fixed element. These gaps will later be hidden by skirting boards or finishing profiles.

3. Layout and setting out of the planks. Offset joints: Make sure the joints of the new floor do not coincide with the joints of the existing base.
End joint stagger: Keep a minimum offset of 20 cm / 8¨ between the end joints of adjacent rows. Minimum plank length: Avoid using cut pieces shorter than 30 cm / 12¨ at the start or end of each row. Structural joints: Never lay planks across building expansion joints.

4. Fixed furniture and kitchens. Do not install kitchen units, islands or heavy built-in cupboards directly on the flooring. To ensure proper performance and warranty coverage, the floor must remain free to expand and contract.

5. Plank orientation. Choose the appropriate laying direction. As a general rule, we recommend laying the length of the planks perpendicular to the main window, following the incoming light. In corridors or narrow areas, lay the planks lengthwise along the corridor.

6. Setting out and width of the last row. Measure the room accurately before installation: the last row of planks must not be narrower than 50 mm / 2¨. If the calculation gives a smaller width, trim the first row lengthwise to balance the layout.

7. UNDERLAYMENT. This flooring already includes a pre-attached underlayment. Do NOT use any additional underlayment or insulation, as it could damage the click locking system and will automatically void the product warranty.

1

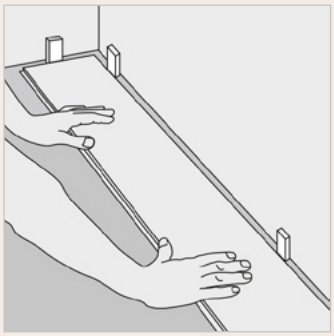

First row, first plank: After cleaning the subfloor thoroughly, start laying from left to right. Place the first plank with the tongue facing you, 6 mm / 1/4¨ from the left-hand wall corner. Use spacers between the wall and the floor.

2

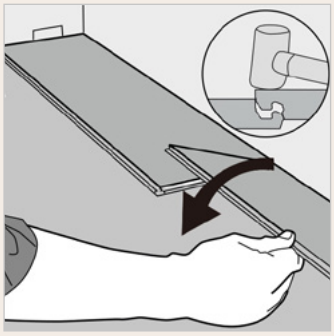

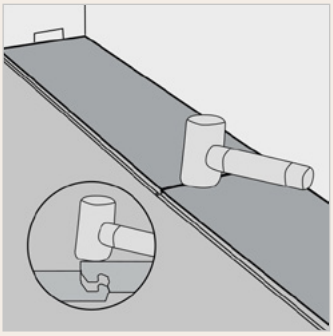

First row, second plank: Drop the plank down and gently tap the end with a rubber mallet so that it locks firmly into the previous plank until both are at the same height. Make sure both planks are perfectly aligned. It is crucial that, once the short edges of two connecting planks are correctly aligned, the rubber mallet strikes the plank directly over the short edge, allowing correct engagement. NOTE: Tapping near the short edge, but not directly over it, can cause permanent damage to the joint. Continue installing the first row until you reach the right-hand wall.

IMPORTANT NOTICE: If you notice that the planks are not at the same height or not properly locked together, please follow the disassembly instructions at the end of the page; take them apart and check for any debris blocking the groove. Poor alignment of the end joint or forcing the mechanism when the planks are not properly engaged can result in permanent damage to the end joint.

SPC INSTALLATION

3

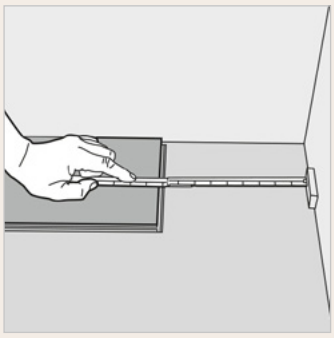

First row, last plank: At the end of the first row, leave a 6 mm / 1/4¨ expansion gap to the wall and measure the length of the last plank so that it has enough space.

4

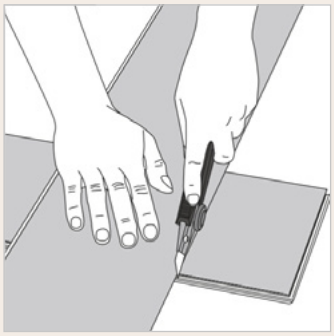



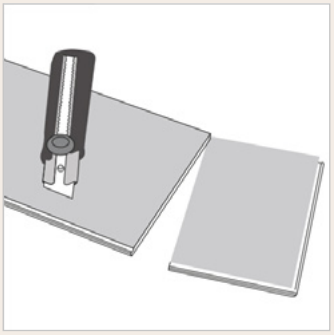

How to cut the plank: To cut the plank, use a knife and a straightedge and, with the face up, score firmly several times along the same line. The knife will not cut through, but will make a deep score. Then lift one half of the plank, using your other hand close to the cut to hold the other half down. The plank will then snap apart naturally.

5

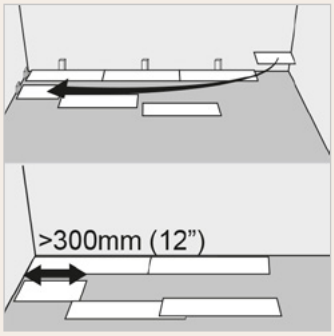

Second row, first plank: Start the second row with the cut-off piece of the last plank of the previous row. This piece must be at least 30 cm / 12¨ long. Otherwise, cut another plank in half and use it to start the second row. End joints in adjacent rows must be at least 20 cm / 8¨ apart. Where practical, use the cut-off piece from the previous row to start the next row.

6

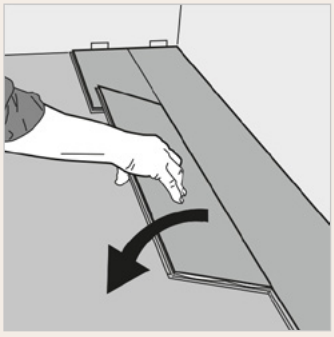

Second row, second plank: Connect the long side of the plank to the previous row and slide it tight against the short end of the previous plank at an angle of 25-30°. Drop the plank down and gently tap the end with a rubber mallet so that it fits tightly against the previous plank until both planks are at the same height. Make sure both planks are perfectly aligned.

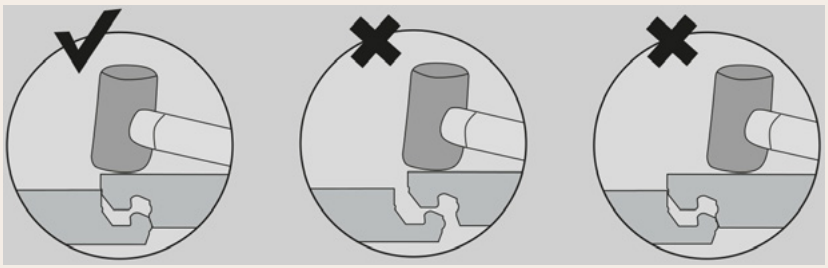

SPC INSTALLATION

7

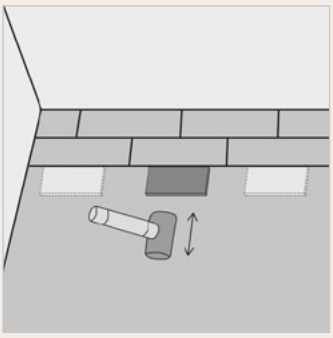

After completing each row: Use offcuts and a small hammer or rubber mallet to lightly tap the planks into the click joint of the previous row, ensuring they are tightly engaged and that there are no gaps along the installed planks. Any gap between planks can compromise the entire installation.

8

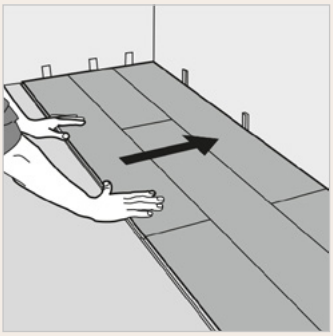

Useful tip: After the first 2-3 rows of planks have been installed, check them with a string line to make sure the rows are still straight. If they are not, the starting wall may have irregularities that have caused the installation to curve. In that case, the first row may need to be scribed and trimmed to account for any irregularities in the wall. This can be done without dismantling the first rows.

9

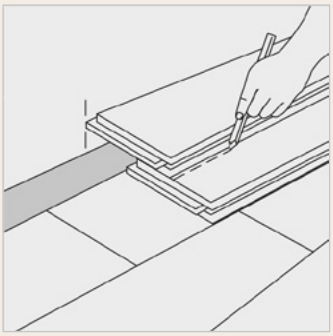

To install the last row: Place a loose plank exactly on top of the last row. Place another plank on top, with the tongue side touching the wall. Draw a line along the edge of this plank to mark the first plank. Cut along the line to obtain the required width. Fit this cut plank against the wall. The last row must be at least 50 mm / 2¨ wide. The spacers can then be removed.

10

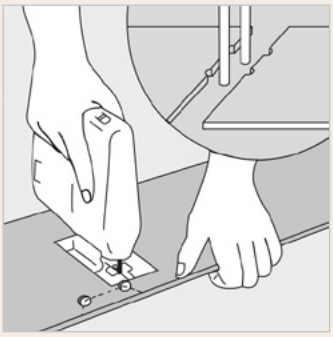

Holes for pipes: Measure the diameter of the pipe and drill a hole 12 mm / 1/2¨ larger. Saw off a piece as shown in the figure and put the plank in place. Then fit the cut-out piece back in place.

11



Door mouldings and skirting: Place a plank (decorative side down) next to the door moulding as shown in the figure. Then slide the plank under the moulding.

SPC INSTALLATION SPECIFIC TO THE MULTI NOGAL SERIES

Each row MUST include one 6.9” / 176 mm wide plank. This sequence must be followed throughout the installation.

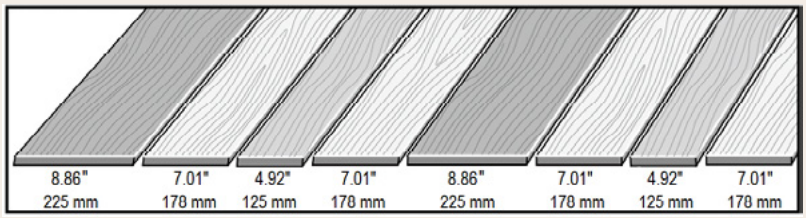

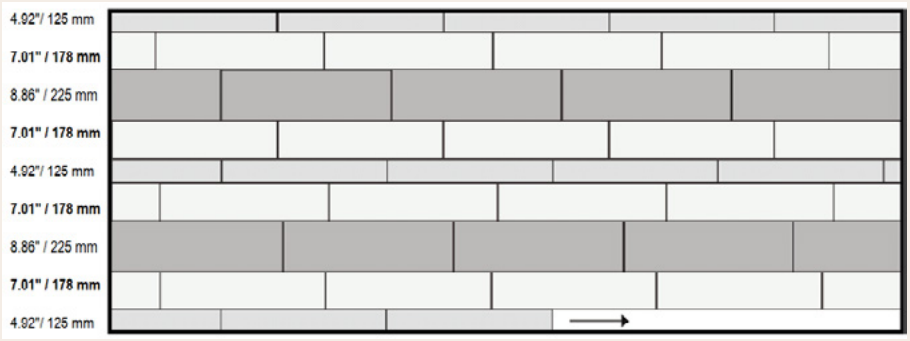

INSTALLATION IN BATHROOMS (10mm GAP)

With existing wall tiles:

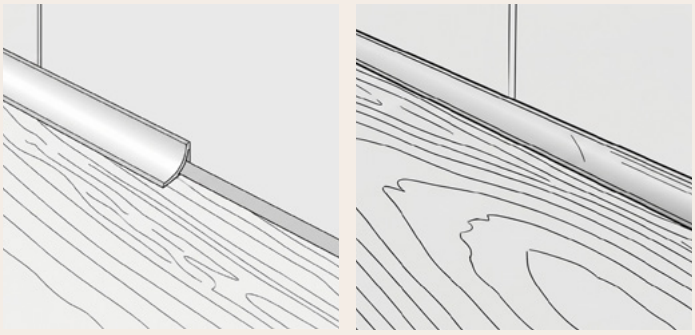

Leave a 10mm. expansion gap, fill with silicone and cover with a scotia moulding.

With new wall tiles:

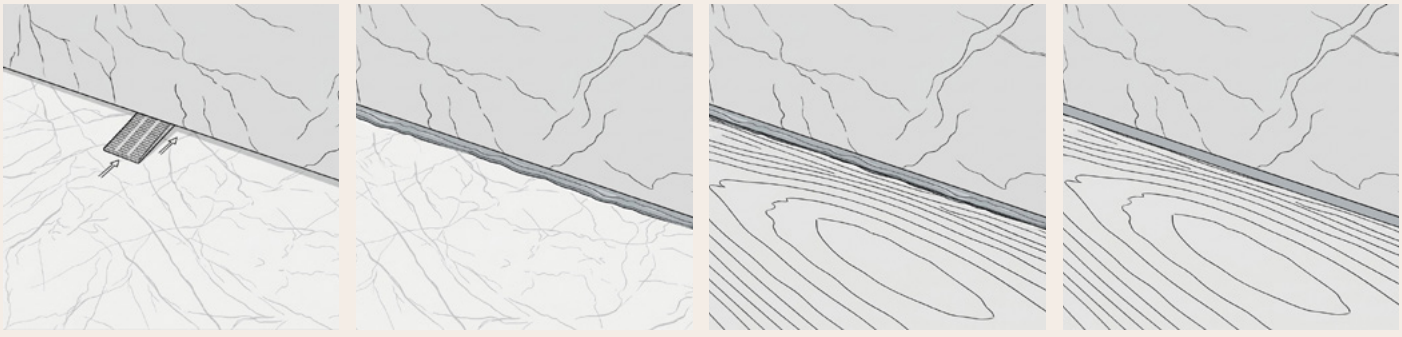

Lay the wall tiles at a height of 6mm. Also leave a 10mm. perimeter gap between the wall and the SPC plank. Fill the gap with silicone and fit the plank under the tile. Grout.

FINISHING THE INSTALLATION

Fitting the skirting board: Refit the skirting board, making sure to leave a small clearance above the flooring so as not to trap it. Always fix profiles or mouldings to the wall, never directly to the floor.

Junctions and transitions: At doorways or where the floor meets other surfaces, use T-moulding transition profiles (or similar) to hide the expansion gaps. Fit these pieces so that they cover the exposed edge without pressing on the flooring, keeping the necessary gap to the adjacent floor.

DISASSEMBLY

Separate the entire row by gently lifting it at an angle. To separate the planks, lay them on the floor and pull them apart. If the planks do not separate easily, you can lift them slightly to about 5 degrees while separating them.

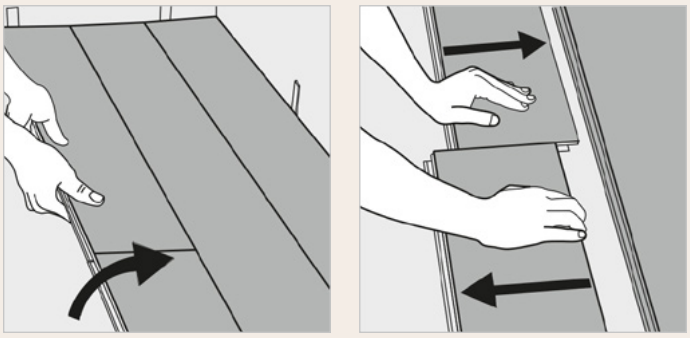

USE AND MAINTENANCE

- Sweep or vacuum daily, using soft-bristle attachments.
- Wipe up spills and excess liquid immediately.
- Damp mop as needed and use detergents recommended for vinyl floors.
- Domestic steam mops may be used on this product. Use the lowest setting with a suitable soft pad, and do not hold the steam mop in one spot for a prolonged period (more than 5 minutes). Refer to the steam mop manufacturer's instructions for proper use.
- Use suitable floor protection such as felt pads under furniture.
- Place a mat at exterior entrances to reduce the amount of dirt brought into your home. Do not use mats with latex or rubber backing, as these backings can cause permanent discolouration.
- Do not use abrasive cleaners, bleach or wax to maintain the floor.
- Do not drag or slide heavy objects across the floor.

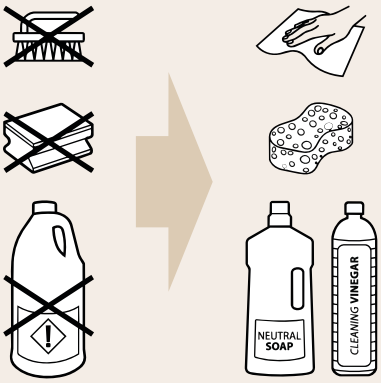

INTELLECTUAL PROPERTY

The content, design, texts and images in this catalogue are protected by current Intellectual Property legislation (Royal Legislative Decree 1/1996).

The total or partial reproduction, distribution or transformation of this document without the prior written authorisation of the company is strictly prohibited. Any unauthorised use may be penalised in accordance with the Criminal Code.

The company reserves the right to alter, update or discontinue the models, formats, finishes or technical specifications shown in this catalogue without prior notice, due to production needs or continuous improvement, without this giving rise to any right to claim or compensation.

All dimensions indicated are standard and may be subject to slight mechanical or manufacturing variations inherent to the production process.

The photographs and decorative compositions shown in this catalogue are for guidance and advertising purposes only.

Due to the characteristics of the materials and printing processes, the colours, textures and shades of printed products may differ slightly from the actual pieces.

It is the buyer's responsibility to check, prior to installation, that the material received fully matches the model, quality, shade and calibre ordered. For the actual installation work, the current technical installation instructions issued and published by the manufacturer must be strictly followed.